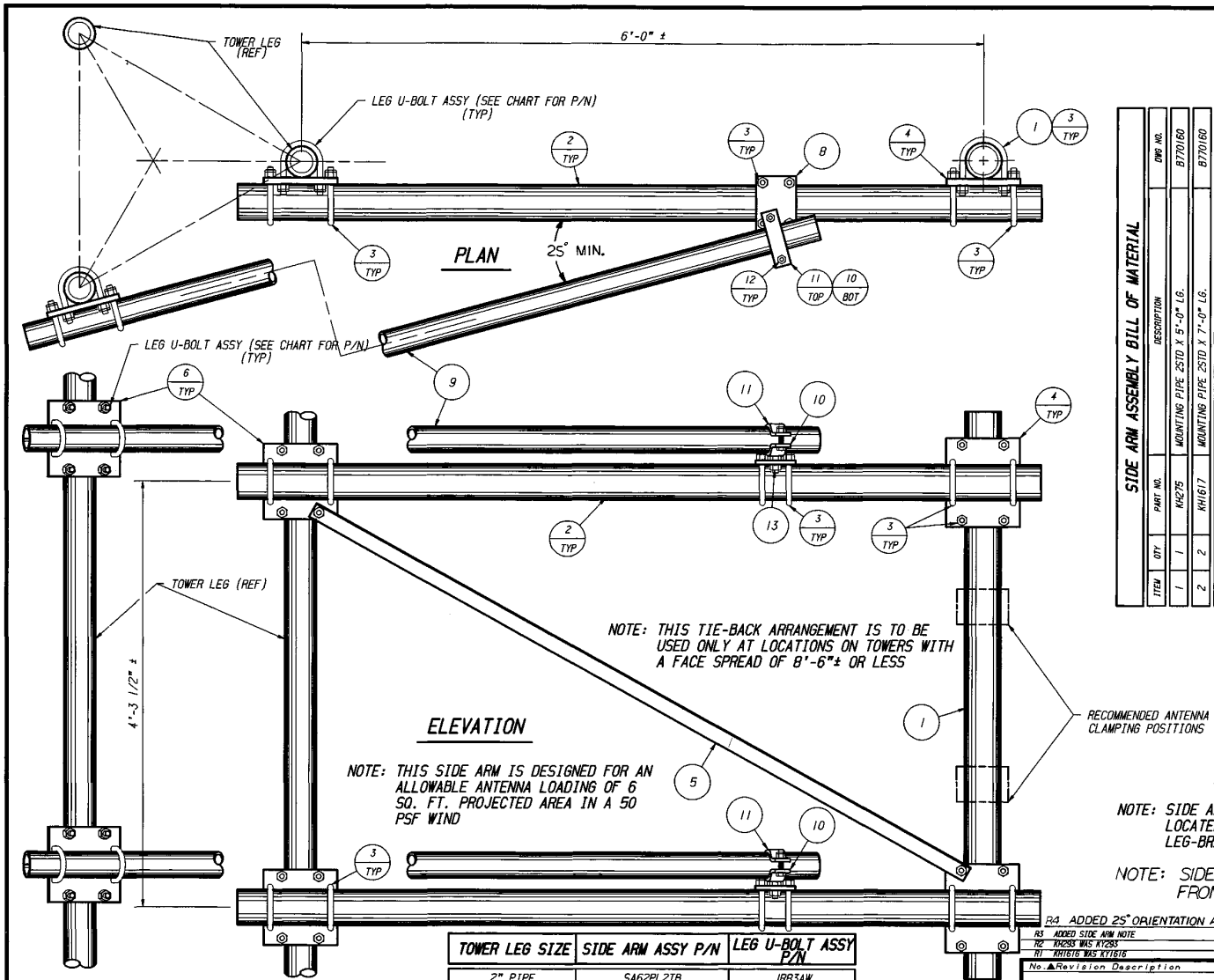

TOWER LEG SIZE	SIDE ARM ASSY P/N	LEG U-BOLT ASSY P/N
2" PIPE	SA62PL2TB	JR83AW
2 1/2" PIPE	SA625PL2TB	JR84AW
3" PIPE	SA63PL2TB	JR88AW
3 1/2" PIPE	SA635PL2TB	JR89AW
4" PIPE	SA64PL2TB	JR85AW

SIDE ARM ASSEMBLY BILL OF MATERIAL

ITEM	QTY	PART NO.	DESCRIPTION	DWG NO.
1	1	KH275	MOUNTING PIPE 2STD X 5'-0" LG.	B770160
2	2	KH1617	MOUNTING PIPE 2STD X 7'-0" LG.	B770160
3	20	JR83A	U-BOLT ASSY	B651028
4	2	KY14	CONNECTION PLATE	C740106
5	1	KH1616	DIAGONAL BRACE L 1 1/2x1 1/2x1/8	B810895
6	4	KH1614	MOUNTING PLATE	B810894
7	8	SEE CHART	LEG U-BOLT ASSY W/WASHERS	B651028
8	2	KY1159	TIE-BACK CONNECTION PLATE	B841241
9	2	KH293	SWAY BRACE 2STD X 13'-4" LG.	B770160
10	2	KY1073	SADDLE CLAMP (LOWER)	B640924
11	2	D114	SADDLE CLAMP (UPPER)	B770214
12	4	2100136A	3/8 X 4 BOLT ASSY	C770404
13	2	230015	1/2" ANCO NUT	N/A

NOTE: WASHERS ARE PROVIDED FOR ALL SLOTTED HOLES

NOTE: SIDE ARM MOUNTING PLATES MUST BE LOCATED AS CLOSE AS POSSIBLE TO LEG-BRACE INTERSECTION.

NOTE: SIDE ARM ORIENTATION MAY VARY FROM TOWER AXIS.

No.	Revision Description	Date	Rev By	Ckd By	Appd By
R4	ADDED 25° ORIENTATION AND NOTE	8-30-91	WEB	WRU	TS
R3	ADDED SIDE ARM NOTE	6/11/90	WEB	KR	TS
R2	KH293 WAS KY293	12/19/86	RKB		
R1	KH1616 WAS KY1616	12/11/86	RKB		

THIS DRAWING IS THE PROPERTY OF ROHN. IT IS NOT TO BE REPRODUCED, COPIED OR TRACED IN WHOLE OR IN PART WITHOUT OUR WRITTEN CONSENT.

ROHN

Scale: NONE	By	Date
Drawn:	RKB	11/4/86
Checked:	GPW	12/4/86
App. Eng.:	TS	12/5/86
App. Sales:	JC	12/5/86

Title: **6' SIDE ARM ASSY W/ 2 TIE-BACKS FOR STRAIGHT OR TAPERED SECTIONS**

ENG. FILE:

DRAWING NO.: C861001R4