NOTES:

1. IT IS THE INSTALLERS RESPONSIBILITY TO VERIFY THAT THIS SYSTEM, ROOF OR WALL, IS ADEQUATE TO SUPPORT ALL LOADS IMPOSED.
2. ALL WAVEGUIDE SUPPORT SYSTEMS SHOULD BE GROUNDED BY INSTALLER TO MEET ALL APPLICABLE CODES.

BILL OF MATERIAL

ITEM	PART NUMBER	DESCRIPTION
1	CTCYA50	CABLE TRAY Y-ADAPTER COVER
2	CTC50	CABLE TRAY COVER
3	CTCYAC	CABLE TRAY Y-ADAPTER CORNER COVER
4	CTCC	CABLE TRAY CORNER COVER
5	CTRSB	CABLE TRAY ROOF STANDOFF BRACKET
6	CTVSB	CABLE TRAY WALL STANDOFF BRACKET
7	CTSR	CABLE TRAY SPACER RAIL
8	CTH	CABLE TRAY HINGE - 3"X7" - ZINC PLATED
9	CTRP	CABLE TRAY ROOF PAD
10	220721	PLASTIC "PUSH-IN" FASTENER
11	220406	BOLT 1/4-20 X 1/2" LG. TYPE"C" ZINC PLATED
12		SNAP IN CABLE HANGER (BY OTHERS)

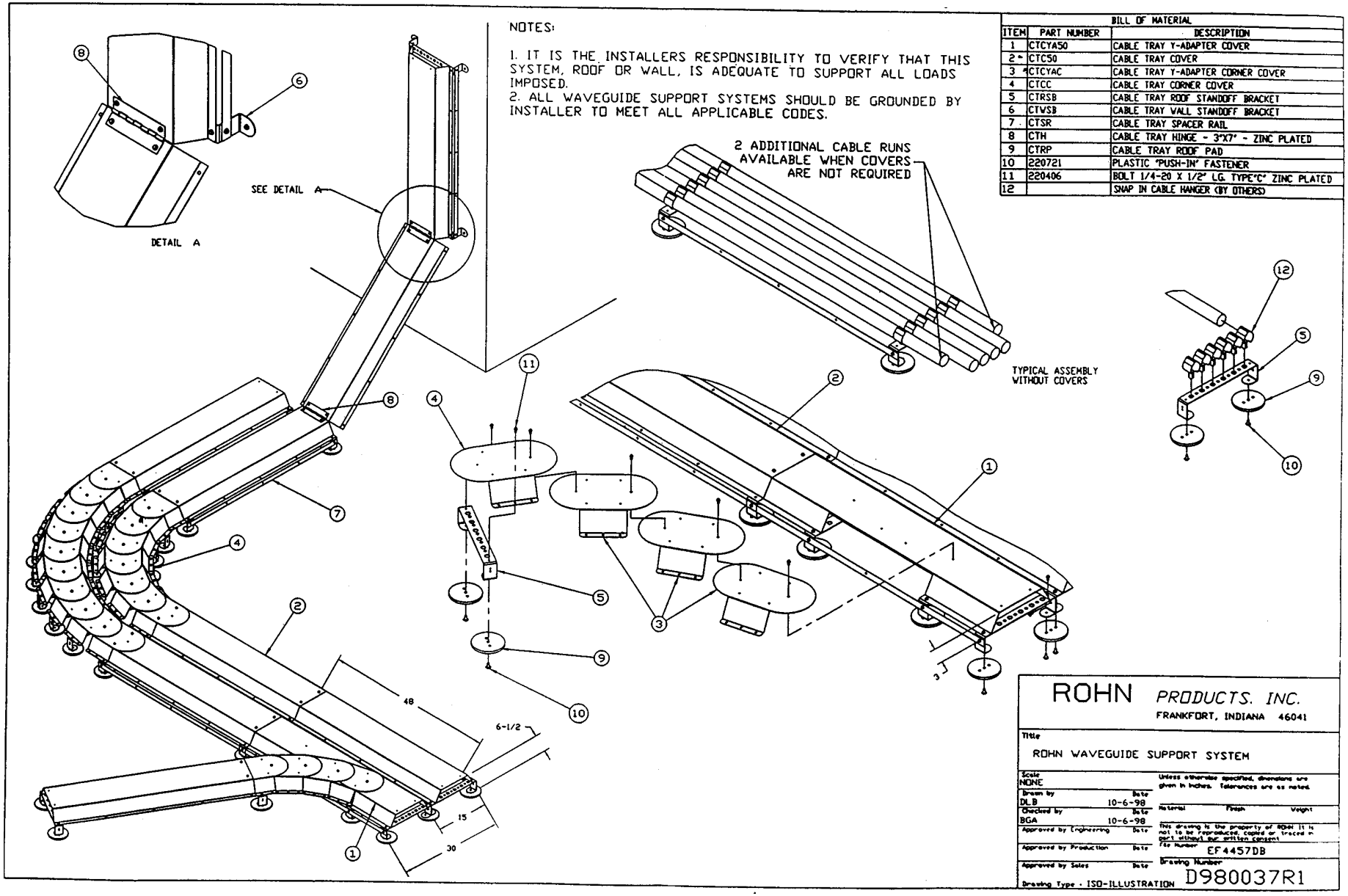

ROHN PRODUCTS, INC.
FRANKFORT, INDIANA 46041

Title: ROHN WAVEGUIDE SUPPORT SYSTEM

Scale: NONE
Drawn by: DLB Date: 10-6-98
Checked by: BGA Date: 10-6-98
Approved by Engineering Date
Approved by Production Date
Approved by Sales Date
Drawing Type - ISO-ILLUSTRATION

Unless otherwise specified, dimensions are given in inches. Tolerances are as noted.
Material Finish Weight
This drawing is the property of ROHN. It is not to be reproduced, copied or traced in part without our written consent.
File Number: EF4457DB
Drawing Number: D980037R1